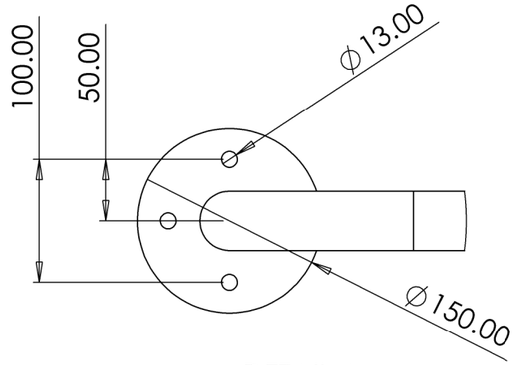

DETAIL A
SCALE 1 : 5

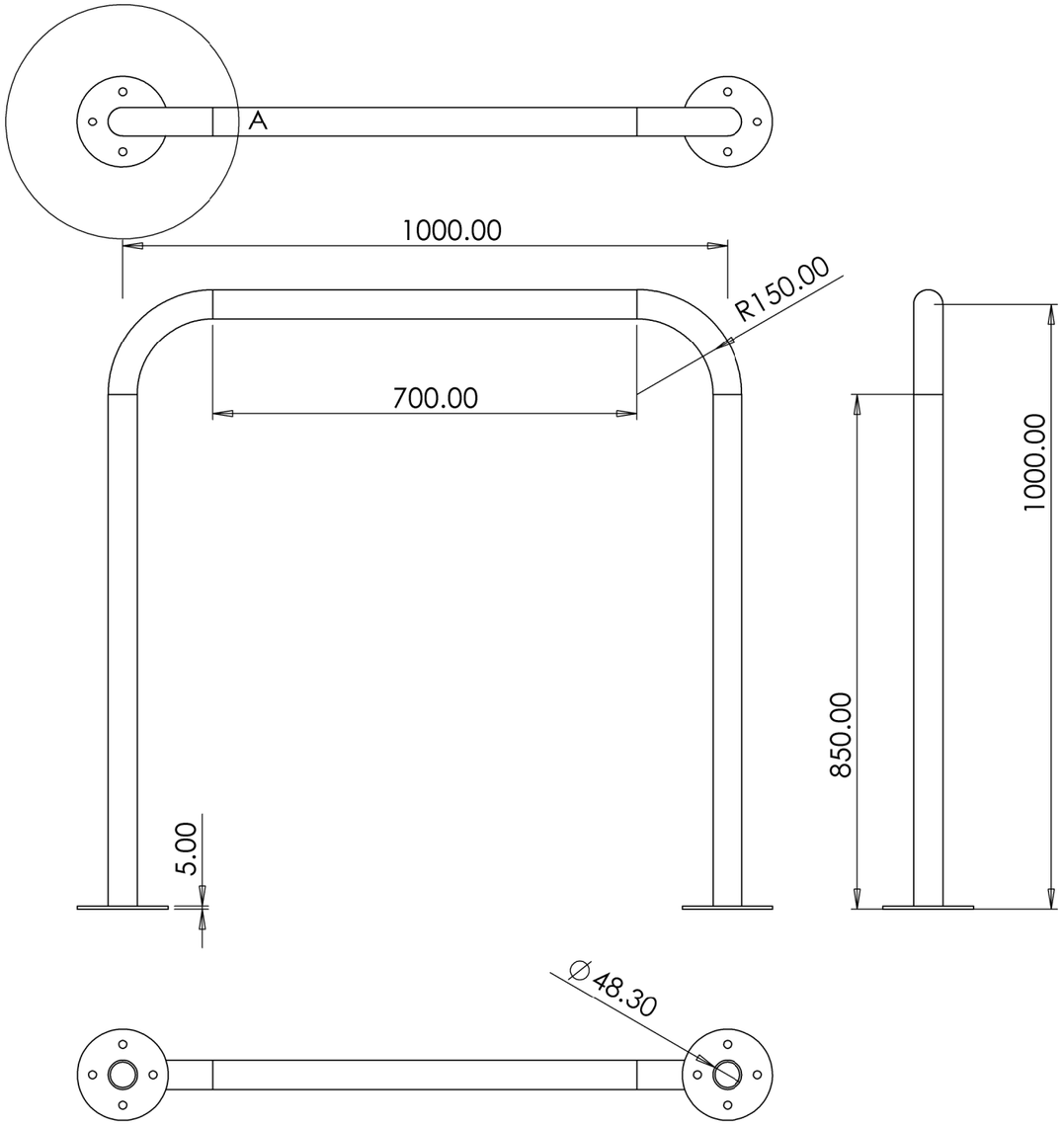

UNLESS OTHERWISE SPECIFIED: DIMENSIONS ARE IN MILLIMETERS SURFACE FINISH: TOLERANCES: LINEAR: ANGULAR:	FINISH: Galvanized			DEBURR AND BREAK SHARP EDGES	DO NOT SCALE DRAWING	REVISION 1
	NAME	SIGNATURE	DATE		TITLE: Hooped Barrier/ Bolted Down	
DRAWN	Lee Hickman		12/06/19			
CHK'D						
APPV'D						
MFG						
Q.A				MATERIAL: Mild Steel	DWG NO. HB-BD-G-L1000-H1000-D48.3	A3
				Weight 11.76 KG	SCALE:1:10	SHEET 1 OF 1