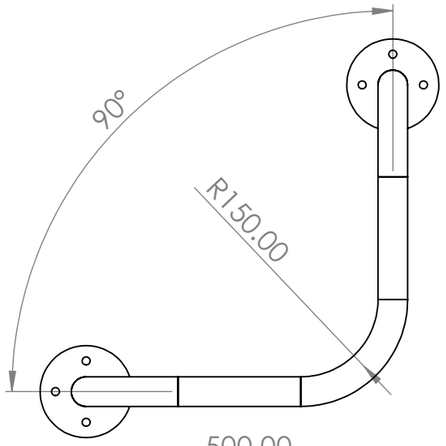

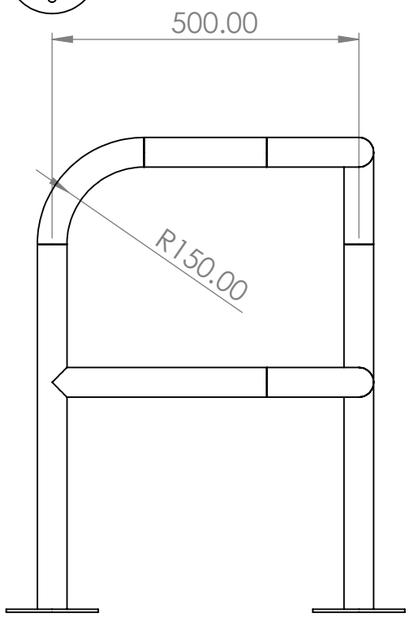

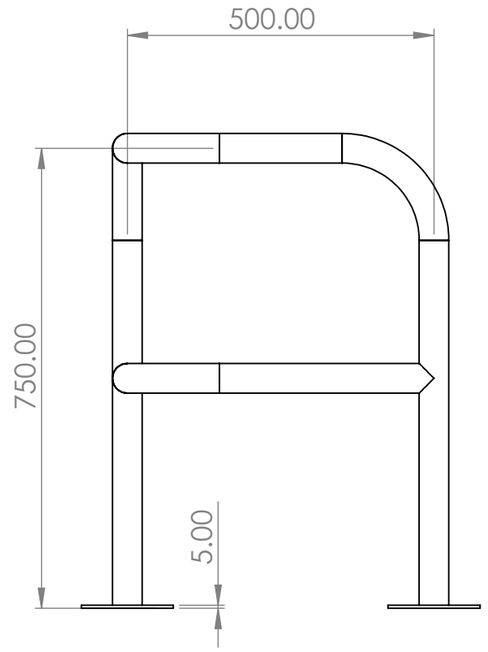

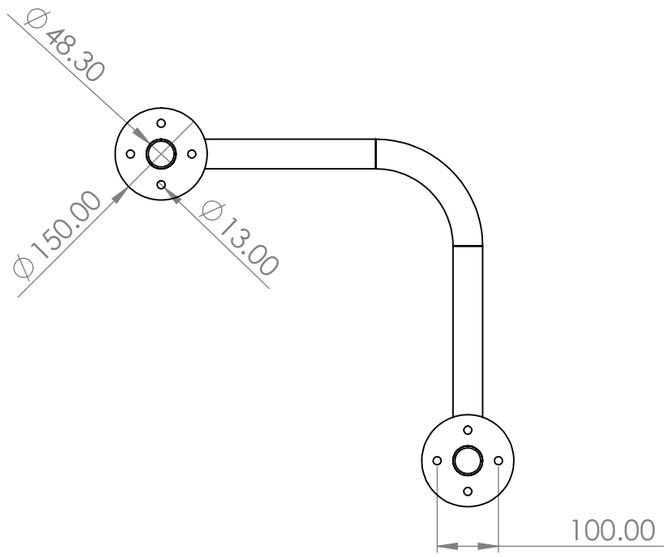

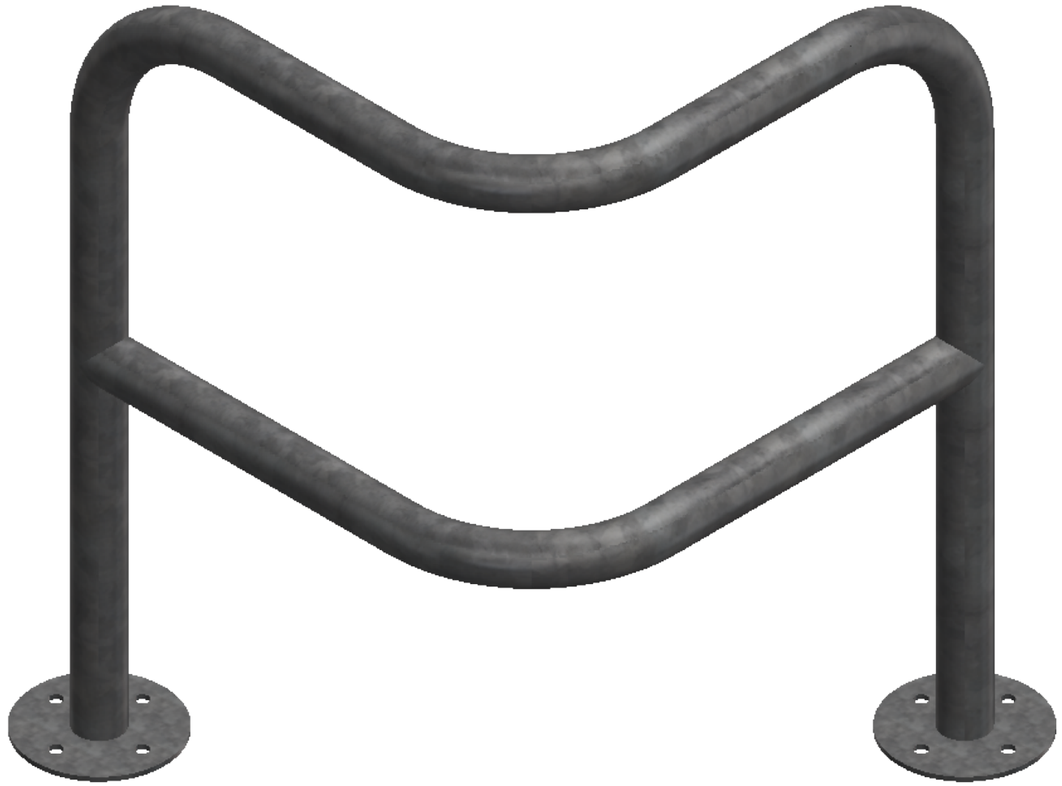

UNLESS OTHERWISE SPECIFIED: DIMENSIONS ARE IN MILLIMETERS SURFACE FINISH: TOLERANCES: LINEAR: ANGULAR:	FINISH: Galvanized			DEBURR AND BREAK SHARP EDGES	DO NOT SCALE DRAWING	REVISION
					METAL PRODUCTS DIRECT	
	NAME	SIGNATURE	DATE		TITLE: H750 x L500 48.3 Dia Galv Hooped Corner Barrier with cross bar	
DRAWN						
CHK'D						
APPV'D						
MFG						
Q.A				MATERIAL: Mild Steel	DWG NO. HCB-BD-CB-G-L500-H750-D48.3	A3
				WEIGHT: 12651.87	SCALE:1:10	SHEET 1 OF 1